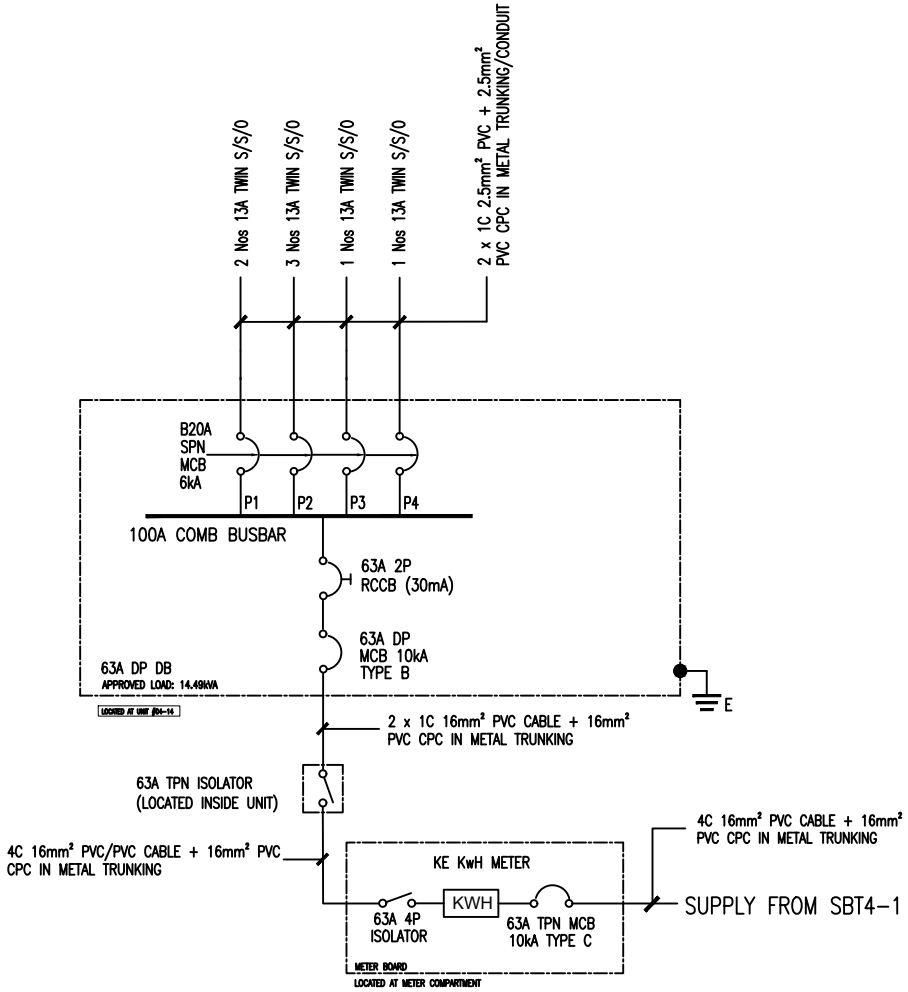

EMA LICENCED ELECTRICAL WORKER
TECHNICIAN
NYAP JUNN YEAN
8/33613
SINGAPORE

CLIENT / ADDRESS :	MAIN CONTRACTOR :	ELECTRICAL CONTRACTOR :	DRAWING TITLE :	LEW :	CHECKED :	DATE :
BEWELL HEALTH TECHNOLOGY PTE LTD I12 Katong #04-29 112 East Coase Road Singapore 428802		I2R M&E PTE. LTD. 709 Yishun Avenue 5 #01-K1 Singapore 760709 TEL: 9777 1983	SINGLE LINE DIAGRAM (SLD)	Ryan, Nyap Junn Yean EMA Licence No. : 8/33613	Ryan	9 Oct 2025
					DRAWING NO. : I2R-BHT-I12-SLD	REV : 0